SCT CONF

SCT CO

SCT

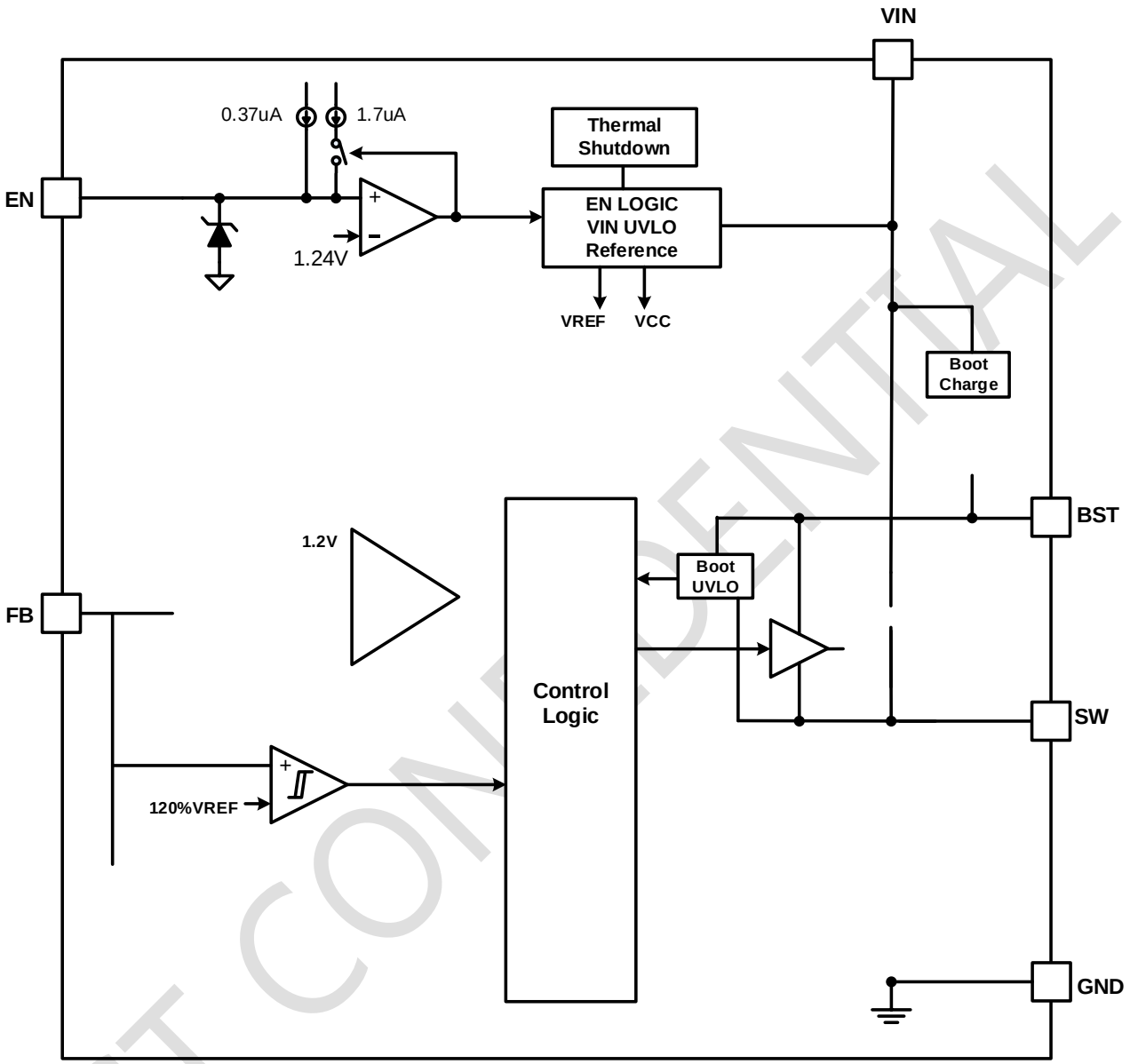

SCT CONFIDENTIAL

SCT CONFIDEN

SCT CONFIDENTIAL

SCT CONFIDENTIAL

SCT CONFIDENTIAL

SCT

SCT CONFIDENTIAL