TYPICAL CHARACTERISTICS

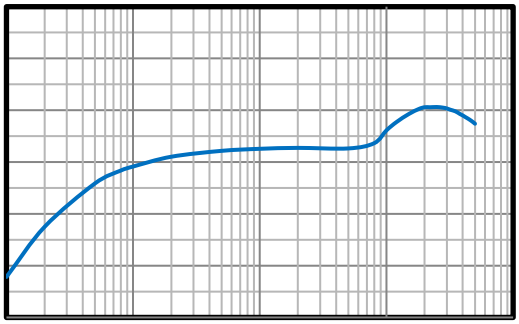

FUNCTIONAL BLOCK DIAGRAM

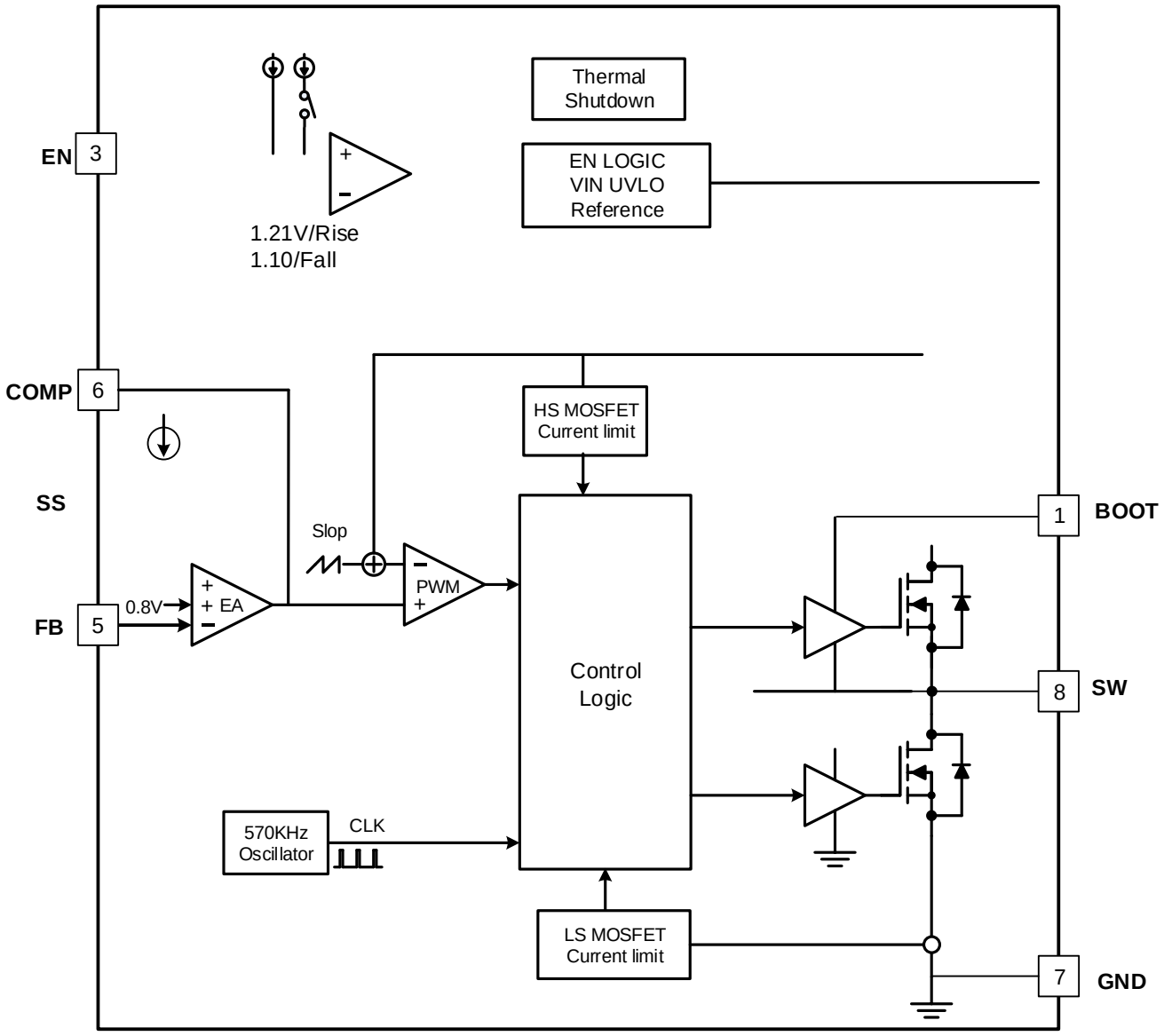

U H G a•0 OPERATION WP'' @ ¢À 9G0o ³• p0 R W y.¿Y–•P D E O H V R I W

K L J K

APPLICATIONINFORMATION

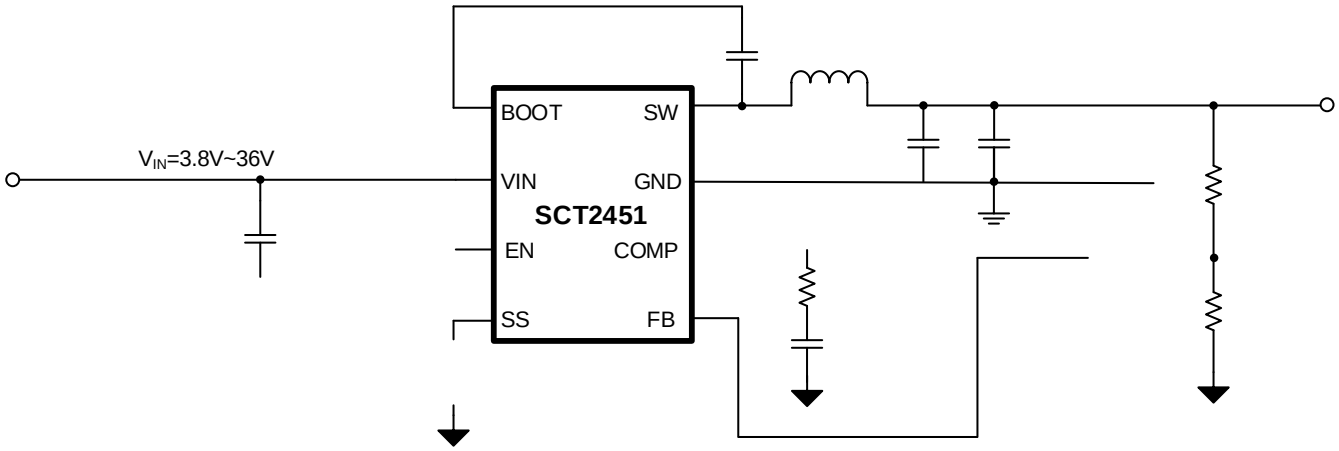

	24V Normal 3.8V to 36V

/US US2 re W* n BT /F5 9 Tf 1 0 0 1 41 220.61 664.66 Tm 0 g 619.78 529/(en-US2 re W* en-BT /F5 EMC /Span <</MCID 104/Lang (04 EMC)>> BDC

-

-
-
-
-
-
-

-
-
-
-

PACKAGE INFORMATION