NOTE: Page numbers for previous revisions may differ from page numbers in the current version.

Revision 1.0: Release to production.

 É 2024 Silicon Content Technology Co., Ltd. All Rights Reserved

SW	8

 É 2024 Silicon Content Technology Co., Ltd. All Rights Reserved

V_{BOOTUV}	BOOT-SW UVLO threshold	BOOT-SW falling	2.36	V

 É 2024 Silicon Content Technology Co., Ltd. All Rights Reserved

 É 2024 Silicon Content Technology Co., Ltd. All Rights Reserved

 É 2024 Silicon Content Technology Co., Ltd.

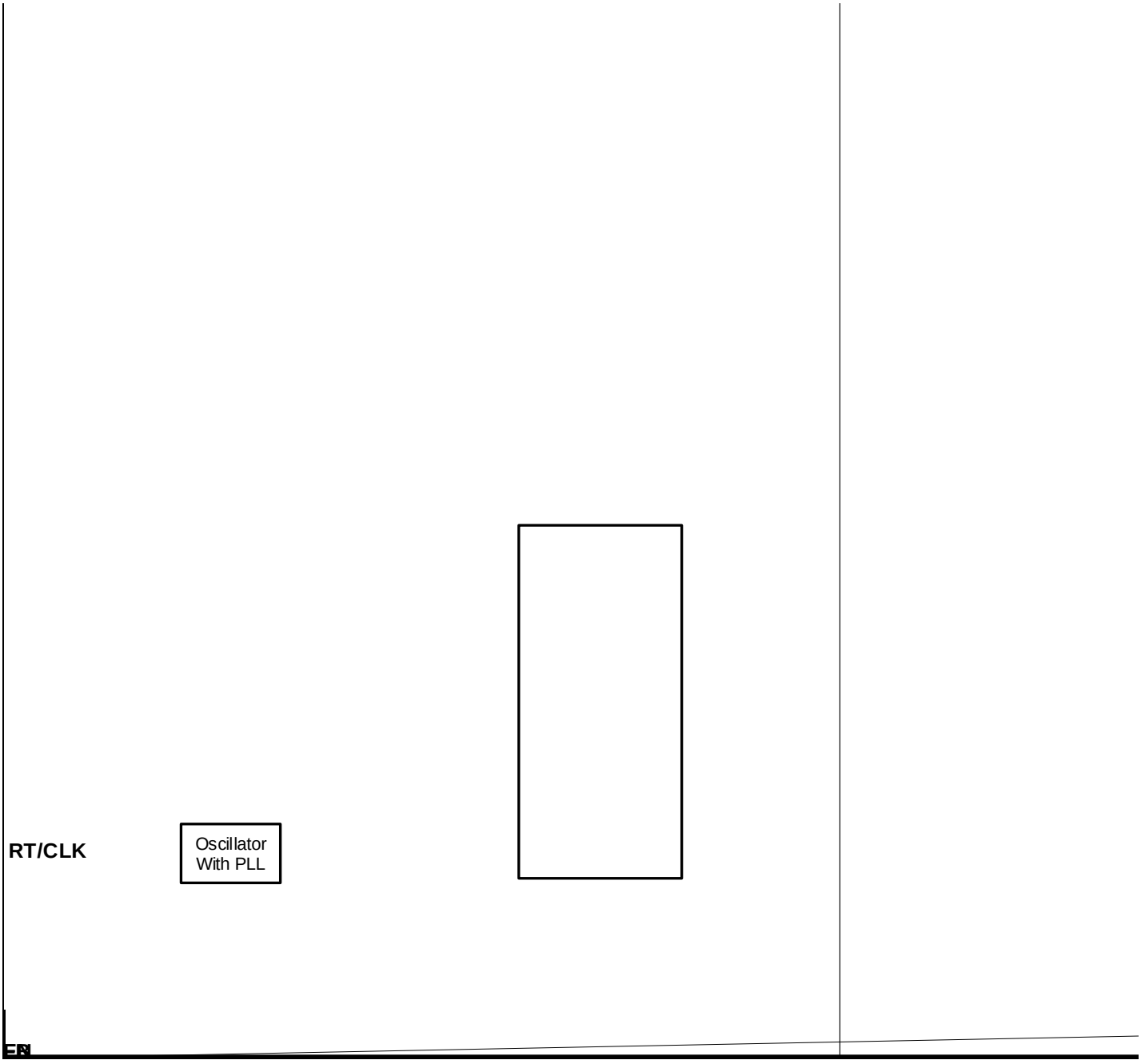

Figure 14. Functional Block Diagram

 É 2024 Silicon Content Technology Co., Ltd. All Rights Reserved

below 1.1V. An internal 1.5uA pull up current source to EN pin allows the device enable when EN pin floats.

EN pin is a high voltage pin that can be connected to VIN directly to start up the device.

For a higher system UVLO threshold, connect an external resistor divider (R1 and R2) shown in Figure 15 from VIN to EN. The UVLO rising and falling threshold can be calculated by Equation 1 and Equation 2 respectively.

 É 2024 Silicon Content Technology Co., Ltd. All Rights Reserved

Input Voltage	24V Normal 3.8V to 40V
Output Voltage	3.3V

Mau V

É 2024 Silicon Content Technology Co., Ltd. All Rights Reserved

The output voltage is set by an external resistor divider R5 and R6 in typical application schematic. Recommended R6 resistance is 10.2Kq . Use equation 5 to calculate R5.

$$_5 = (\text{——} - 1) \quad _6 \qquad (5)$$

where:

- V_{REF} is the feedback reference voltage, typical 0.8V

 É 2024 Silicon Content Technology Co., Ltd. All Rights Reserved

to lower output voltage ripple. However, the larger value inductor always corresponds to a bigger physical size, higher series resistance, and lower saturation current. A good rule for determining k Ï y always

 É 2024 Silicon Content Technology Co., Ltd. All Rights Reserved

Where

- ΔV_{OUT}

© 2024 Silicon Content Technology Co., Ltd. All Rights Reserved

$$f_3 = \frac{1}{2 \quad {}_6 \quad {}_4} \tag{23}$$

The crossover frequency of converter is shown in Equation 24.

$$f = \frac{\quad}{\quad} \quad \frac{\quad {}_4}{2} \tag{24}$$

The system crossover frequency, where the feedback loop has unity gain, is important. A lower crossover frequency results in slower line and load transient response. A higher crossover frequency could cause the system unstable. A recommended rule of thumb is to set the crossover frequency to be approximately 1/10 of switching frequency.

The following steps can be followed to calculate the external compensation components. Calculate the compensation resistor R4 with Equation 25 once crossover frequency is selected.

$$_4 = \frac{\quad}{\quad} \quad \frac{2}{\quad} \tag{25}$$

Then calculate C7 by placing a compensation zero at or before the output stage pole.

$$_7 = \frac{\quad}{4} \tag{26}$$

Determine if the optional compensation capacitor C6 is required. Generally, it is required if the ESR zero f_{Z2} is located less than half of the switching frequency. Then fp3 can be used to cancel fz2. C6 can be calculated with Equation 27.

$$_6 = \frac{\quad \times \quad}{\quad {}_4} \tag{27}$$

Table 3 lists typical values of compensation components for some standard output voltages with various output ceramic capacitors and inductors. The values of the compensation components have been optimized for fast transient responses and good stability. For the conditions not list in Table 3, customers can use Equation 25-Equation 27 to optimize the compensation components.

 É 2024 Silicon Content Technology Co., Ltd. All Rights Reserved

The SCT2430Q can be used to convert a positive input voltage to a negative output voltage. Typical applications are amplifiers requiring a negative power supply.

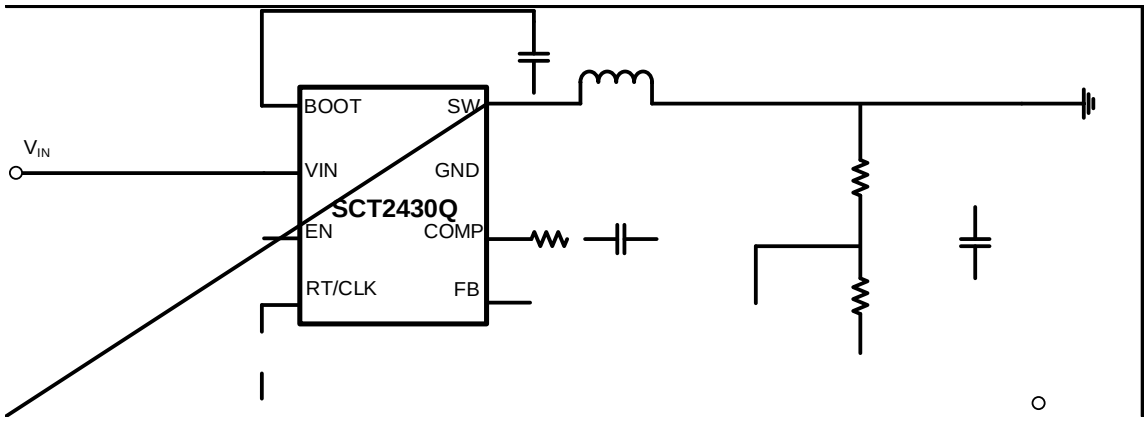

 É 2024 Silicon Content Technology Co., Ltd. All Rights Reserved

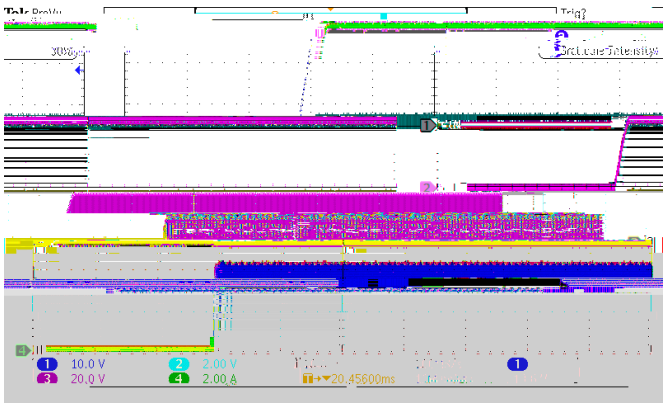

Figure 20. Power up

Figure 21. Power down

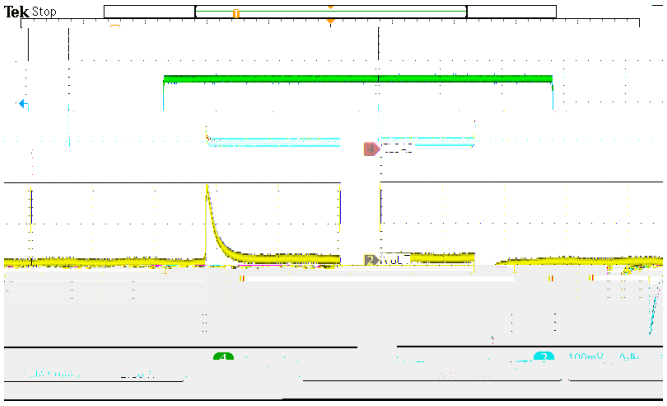

Figure 22.Load Transient (0.35A-3.15A, 250mA/us)

Figure 23. Load Transient (0.875A-2.625A, 250mA/us)

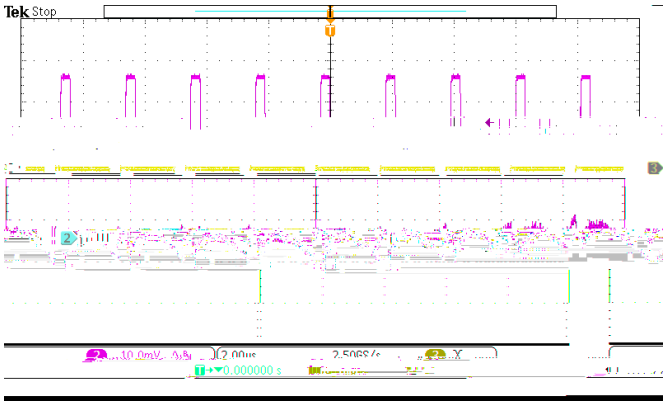

Figure 24. SW and Vout Ripple (Iout=3.5A)

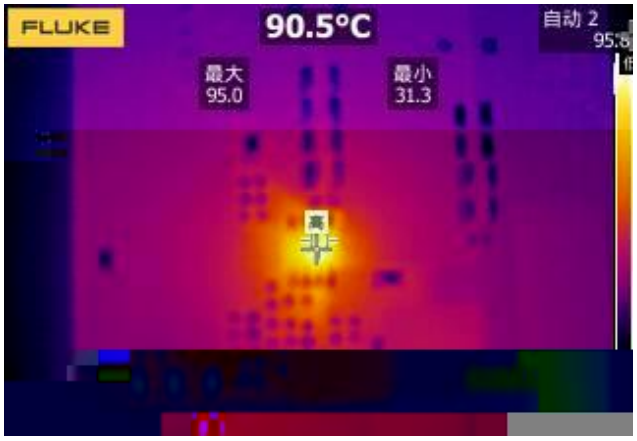

Figure 25. Thermal, 3.3Vout/3.5A

 É 2024 Silicon Content Technology Co., Ltd. All Rights Reserved

 É 2024 Silicon Content Technology Co., Ltd. All Rights Reserved

SOP8/PP(95x130) Package Outline Dimensions

Symbol	Dimensions in Millimeters		Dimensions in Inches	
	Min.	Max.	Min.	Max.
A	1.300	1.700	0.051	0.067
A1	0.000	0.100	0.000	0.004
A2	1.350	1.550	0.053	0.061
b	0.330	0.510	0.013	0.020
c	0.170	0.250	0.007	0.010
D	4.700	5.100	0.185	0.201
D1	3.050	3.250	0.120	0.128
E	3.800	4.000	0.150	0.157
E1	5.800	6.200	0.228	0.244
E2	2.160	2.360	0.085	0.093
e				

É 2024 Silicon Content Technology Co., Ltd. All Rights Reserved

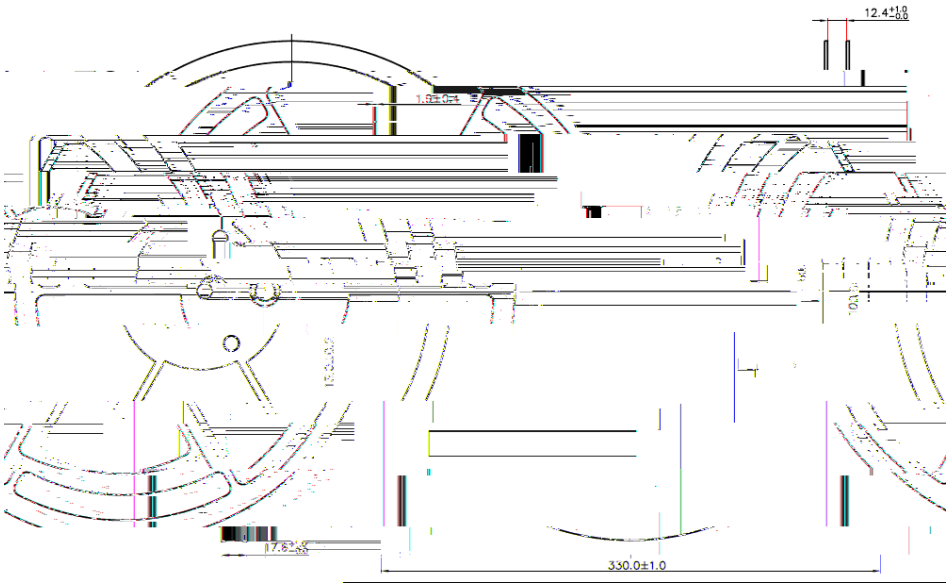

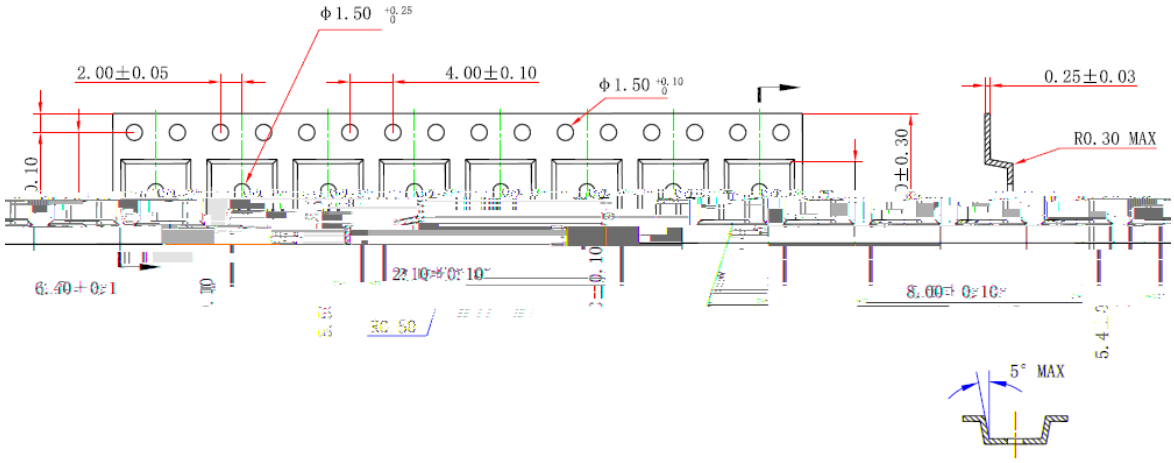

The information in this document is subject to change without notice. Users should warrant and guarantee the third party Intellectual Property rights are not infringed upon when integrating Silicon Content Technology (SCT) products into any application. SCT will not assume any legal responsibility for any said applications.

 É 2024 Silicon Content Technology Co., Ltd. All Rights Reserved